LK013 MANUAL

Product Features

1.CPU process control, count scores accurately.
2.Prevent pulling out tickets.
3.Prevent motor idling.
4.Easier to clean up the blocked tickets.
5.Mantissa memory (When the tickets run out,after putting new tickets the device will restart to work automatically).
6.The wire part is made by SMT technology,quality and stability.
7.Adopt high quality and high-speed motor,continuously dispense tickets without pause.
8.Built-in scale setting program.

Instructions for use

1.According to the need of machine's motherboard, switch the output to NC or NO, switch the input to High level or Low level.
2.Put the tickets into the guide slot, the ticket dispenser will start to install tickets automatically. (or hold down the "manual" key to install the tickets manually).
3.The ticket dispenser can be used after connecting the power and signal wires.

A Input level:
Low level input trigger
High level input trigger

B Output mode
NC. Normally closed
NO. Normally open

C manual:
For installing tickets manually and testing

D Reverse:
For cleaning up the blocked tickets and testing

E Ticket guide:
when jammed, gently press down on the Ticket guide andpull it outwards.



F Power&Communication

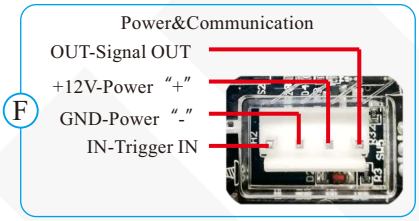

H Indicator light connection:

About indicator light information	
Status of the indicator light⑥	Mean
Fast-flashing	The ticket is stuck
Slow-flashing	The ticket is gone
Light off status	Ticket loading completed

Note ⑥:Indicator light:
Voltage = 1.5~3.6V , Current = 5~20mA

Please connect this interface with a PH2.0-5P male plug terminal.



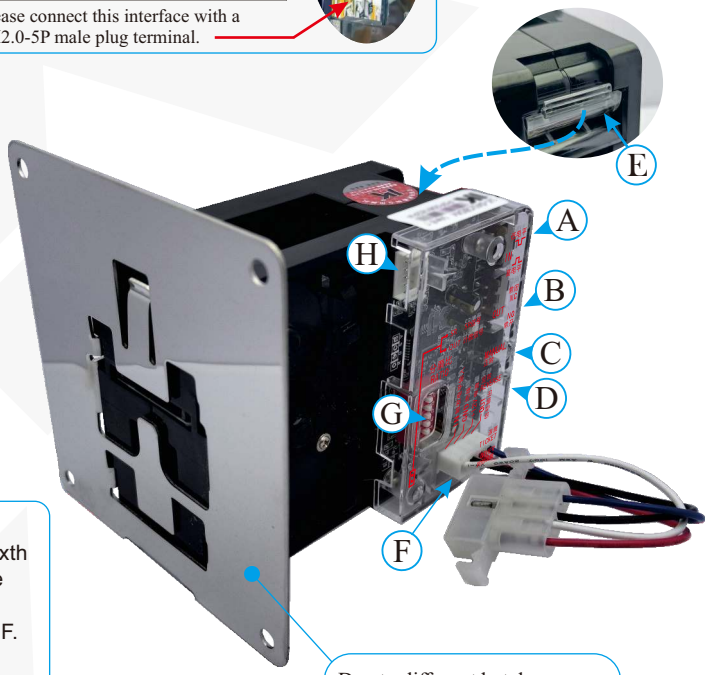

Due to different batches, the surface texture of the panel will be slightly different, which is completely normal.

DIP switch setting G

The sixth DIP switch is ON stand for score/ticket otherwise is ticket/score

Ratio	Switch setting 1	2	3	4	5	Ratio	Switch setting 1	2	3	4	5
1:1						1:17					ON
1:2	ON					1:18	ON				ON
1:3		ON				1:19		ON			ON
1:4	ON	ON				1:20	ON	ON			ON
1:5			ON			1:21			ON		ON
1:6	ON		ON			1:22	ON		ON		ON
1:7		ON	ON			1:23		ON	ON		ON
1:8	ON	ON	ON			1:24	ON	ON	ON		ON
1:9				ON		1:25				ON	ON
1:10	ON			ON		1:26	ON			ON	ON
1:11		ON		ON		1:27		ON		ON	ON
1:12	ON	ON		ON		1:28	ON	ON		ON	ON
1:13			ON	ON		1:29			ON	ON	ON
1:14	ON		ON	ON		1:30	ON		ON	ON	ON
1:15		ON	ON	ON		1:31		ON	ON	ON	ON
1:16	ON	ON	ON	ON		1:32	ON	ON	ON	ON	ON

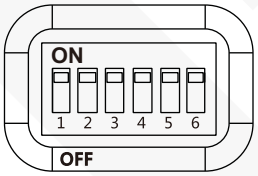

Example:
1.To set 1 score for 8 tickets (score/ticket = 1:8). Turn the sixth switch to ON, and then turn the first,second,and third switches to ON, with all others set to OFF.
2.To set 4 scores for 1 ticket (ticket/score = 1:4). Turn the sixth switch to OFF, and then turn the first,second switches to ON, with all others set to OFF.
(Factory default ratio: 1:1)

Communication circuit

Description of interface circuit and communication relationship of ticket outlet:
1.The output signal circuit of the ticket outlet is triode collector or MOS drain open circuit output mode. When it is used,users are advised to use optocouplers to receive signals when designing the interface circuit (see Figure 1).
2.Game machine is Master device, ticket outlet is Slave device.
3.The relationship of the Master inputing control signal, the Slave outputing signal, and motor status is shown in Figure 3. The workflow is shown in Figure 2.

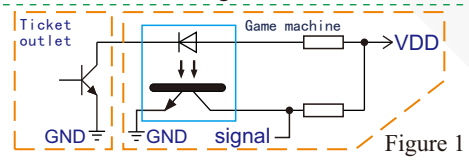

Figure 1

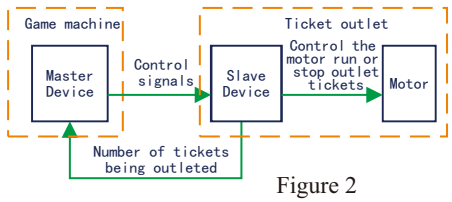

Figure 2

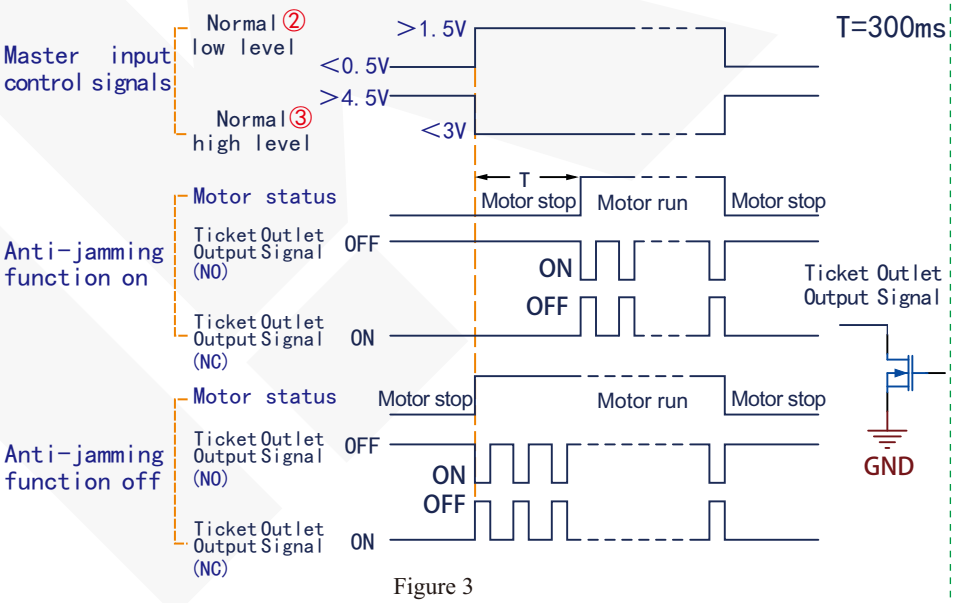

Figure 3

Note②、Note③:Refer to the ELECTRICAL CHARACTERISTICS

Likang Electronic Technology Co.,Ltd.
www.lk.cm

Assembly dimensions Unit: mm

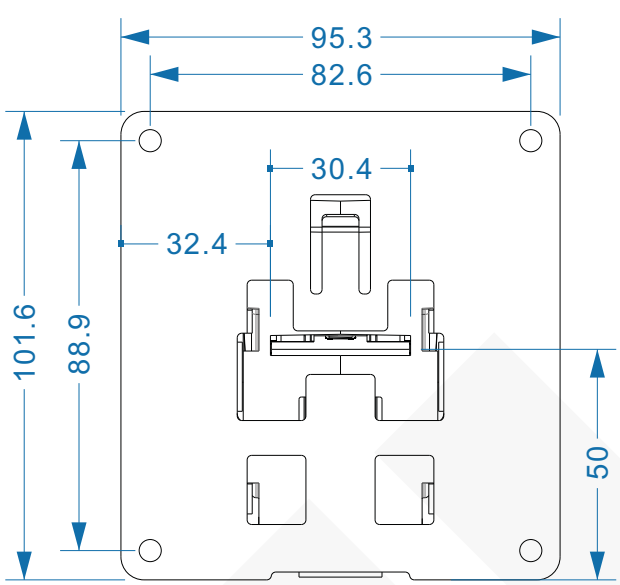

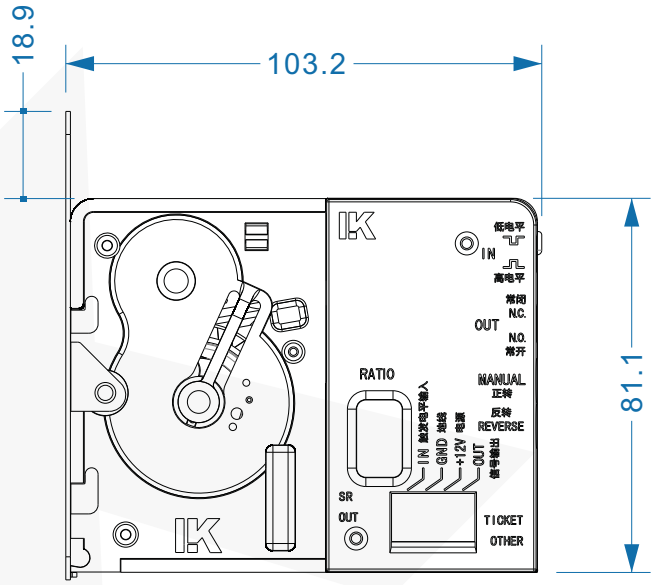

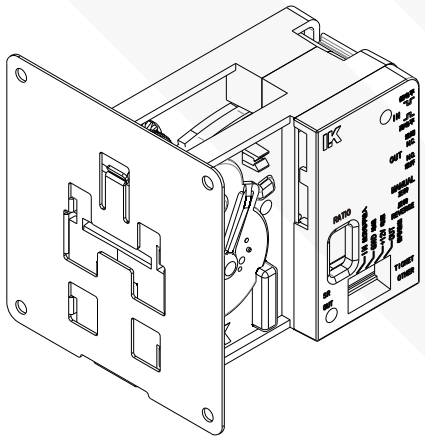

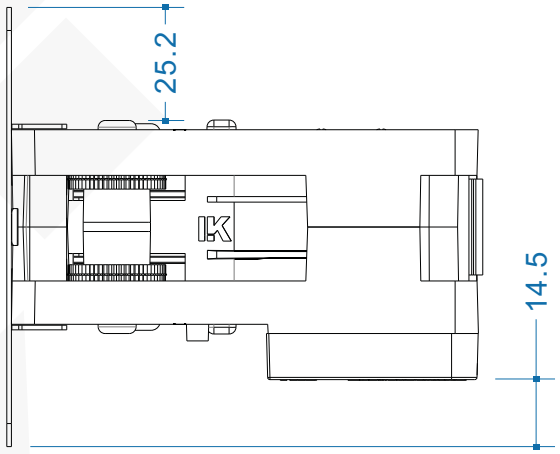

Symptom	Common Exception Handling
The tickets are blocked	Pull out the upper guided board from the ticket machine's back, and clear away the jammings.
NO ticket	1.Check the machine power outlet connect or not,poorly connect or not. 2.Check input level is correct or not. 3.Check whether something is blocked in the ticket channel. 4.Check whether the guide plate is dropped. 5.To the check the plug of motor loose or not. 6.If the panel indicator is flashing, please reload the ticket
Tickets out not matching to the score-ticket ratio	1.Check that the ratio switch is set correctly. 2.Ground connection(Means "GND") between the machine and the ticket outlet Resistance is not 0Ω.
Remain ticket will be automatically outlet after loading	1. Check whether the input level switch is set correctly. 2. If the previous outlet is not completed, the remaining tickets will be automatically finish first after reloading ticket.
Fail to install ticket	1.Check for foreign objects blocking the holes of tickets or not. 2.Check whether the circuit voltage is too low or electric eye is bad. 3.Insert the ticket into the ticket channel and press the forward key to complete manual ticket loading.
No long press on the forward or reverse key	Due to the program is equipped with a protection function, if long press the forward or reverse key for more than 7 seconds, the protection function activates and the motor stops rotating. But it will returns to normal after releasing the key.
Dispensing tickets delay	After adding ticket,if there is still points left on the machine, the ticket will outlet after waiting a few seconds. This design is to facilitate the placement of tickets and close the hatch by staff.
Noise	There is a slight noise occasionally during the operation of the mechanical structure and the noise will down when dispensing ticket. This phenomenon is normal.

Performance parameter		
Operating voltage		DC 12V±10%
Operating current		<50mA
Load current		≤1.2A
Output mode		OC
Output Signal		30ms，＜650mA
Low level input trigger TTL		0~0.5V
High level input trigger TTL		4.5~5V①
Speed of tickets		Up to 250mm/s
Individual packaging	Meas	128*104*130mm
	Gross weight	377g
Carton packaging	Package	20PCS/SET
	Meas	530*265*280mm
	Gross weight	8.13KG

Note ①:The measured high level input trigger can withstand voltage up to 15V.

If product technology improved, it will be edited in the new manual without notice. The ultimate interpretation of this manual is up to Guangzhou Likang Electronic Technology Co.,Ltd.

Likang Electronic Technology Co.,Ltd.
www.lkchina.asia

ELECTRICAL CHARACTERISTICS

Parameter	Min	Typical	Max
Supply Voltage	11.0V	12.0V	13.0V
Standby Current		17mA	
Motor Start Current	2.45A	2.85A	3.3A
Motor Run Current	0.6A	0.65A	0.7A
Motor Enable On Voltage	② 4.5V	5V	15V
	③ 0V	0V	0.5V
Motor Enable On Current	450uA		2mA
Motor Enable Off Voltage	② 0V	0V	0.5V
	③ 4.5V	5V	15V
Motor Enable Off Current			0
Ticket Notch Sink Current			500mA
Ticket Notch Voltage pull-up			30V

Steps to set the speed mode of the ticket dispense

Long press the reversing button>>>Power on>>>Blue light on>>>Release the reversing button>>>Blue light off>>>Enter the selection mode>>>Short press the reversing button to switch to different modes>>>Observe the status of the blue indicator(Compare to ④ indicating the currently selected mode)>>>Selected mode>>>Short press the forward button to lock the mode and exit the setting (Blue light and yellow light flash once)>>>Setup successful

④Status of the blue light	Mode	Time for a ticket⑤	
		Pulse time	Response time
Off (default)	Fast-speed release	30ms	50ms
On	Medium-speed release	50ms	90ms
Flashing	Slow-speed release	50ms	300ms

Note ⑤:This parameter is a theoretical value.The "Pulse time" is fixed, due to the transmission mechanisms such as motors, the "Response time" is usually large.

If product technology improved, it will be edited in the new manual without notice.
The ultimate interpretation of this manual is up to Guangzhou
Likang Electronic Technology Co.,Ltd.